SPECTRA Series

Commercial SMD-LED Gimbal Down Light

- SPECTRA Series 120 Degree Recessed Down Light
- Up to 80% increased Energy Savings
- High Efficiency SMD LED Light Engine
- Fast Installation
- Available in 3000K /4000K/ 5500K Colour Options

5 YEAR EXTENDED WARRANTY

Advanced LED Lighting

SPECTRA Series 5-year extended warranty.
The SPECTRA extended product replacement warranty requires online registration.
Visit www.syntechinternational.com.au/warranty to register your product..

Syntech's SPECTRA recessed shop light series is a versatile and distinct LED-based light that provides lighting designers with a broad range of design options to illuminate and accent architecture for internal lighting applications.

Sleek Design, Flicker Free Performance

Uncomplicated, sophisticated design queues work seamlessly with architectural elements, creating glare free, low maintenance light for general illumination needs.

Zero Ongoing Maintenance

The SPECTRA is manufactured to deliver maximum light output and long service life. Designed with ease of installation in mind, the SPECTRA series uses an industry standard hole cut-out dimension used by the markets leading rectangular halogen and metal halide fixtures. In retrofit applications, the SPECTRA series can normally be installed into the existing cut-out, reducing installation costs.

Superior Performance

The SPECTRA Series incorporates advanced SMD LED technology with an LM70 rating of 50,000 hours.

The SPECTRA Series is backed by our 5-year commercial product replacement warranty for complete assurance of performance reliability

5 YEAR EXTENDED WARRANTY

SPECTRA SERIES

At Syntech, we believe that a manufacturers warranty is your assurance of quality.

This is why the SPECTRA series is supported by a full 5 year product replacement warranty.All Syntech products comply to the latest AS/NZS Lighting Standards.

TO REGISTER YOUR WARRANTY, SIMPLY GO TO www.syntechinternational.com.au/warranty

SERVICES & SUPPORT
If you have any questions about the SPECTRA range, please contact a member of our team.

CUSTOMER SERVICE
1300 721 820
EMAIL
admin@syntechinternational.com.au

Espectra Series Specifications

Direct metal halide replacement

- Ultra-efficient 102-110 lumens per circuit Watt
- 80% Energy Savings
- Seamless Retrofit Solution
- No Ongoing Maintenance.
- Slimline profile
- Instant start up, Flicker-free performance
- Low Glare Lensing
- Available in 3000K/4000K/5500K options

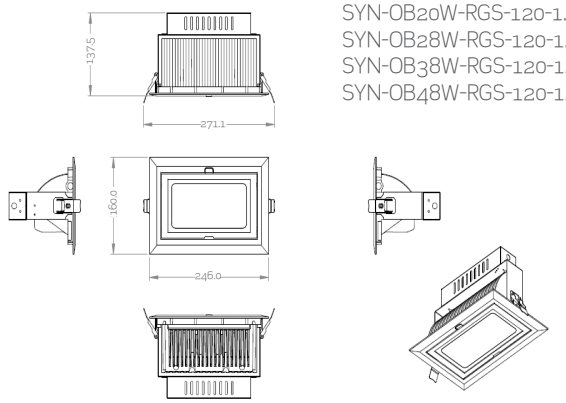

SYN-OB20W-RGS-120-1.5
SYN-OB28W-RGS-120-1.5
SYN-OB38W-RGS-120-1.5
SYN-OB48W-RGS-120-1.5

102-108 LPW
Lumens per Watt
(Model Dependant)

20W - 2200 Lumens
28W - 2820 Lumens
38W - 3876 Lumens
48W - 4910 Lumens

CODE	DESCRIPTION	COLOUR TEMP	LED	LUMENS	LPW	IP
SYN-OB20WRGS-120-1.5	SPECTRA Series 20w Rectangular Downlight	3000k/4000k/5500K	20W	2200	108	IP20
SYN-OB28WRGS-120-1.5	SPECTRA Series 28w Rectangular Downlight.	3000k/4000k/5500K	28W	2820	102	IP20
SYN-OB38WRGS-120-1.5	SPECTRA Series 38w Rectangular Downlight	3000k/4000k/5500K	38W	3876	102	IP20
SYN-OB48WRGS-120-1.5	SPECTRA Series 48w Rectangular Downlight	3000k/4000k/5500K	48W	4910	108	IP20

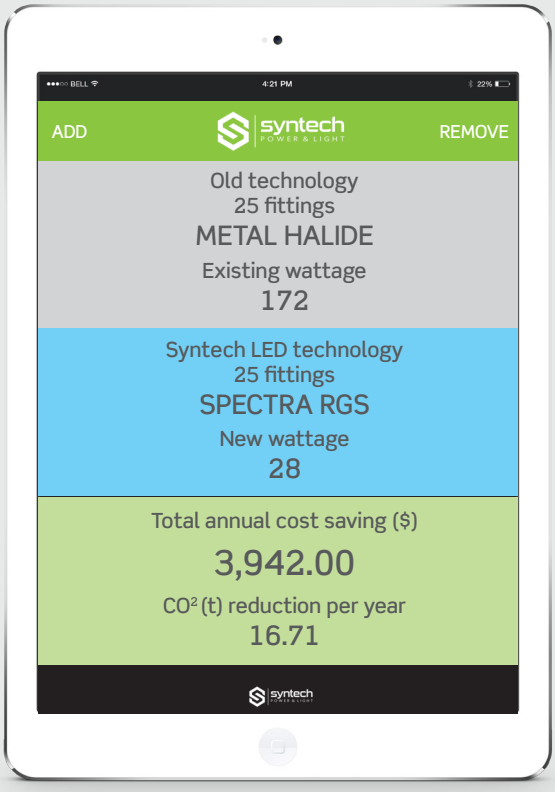

syntechinternational.com.au
1300 721 820